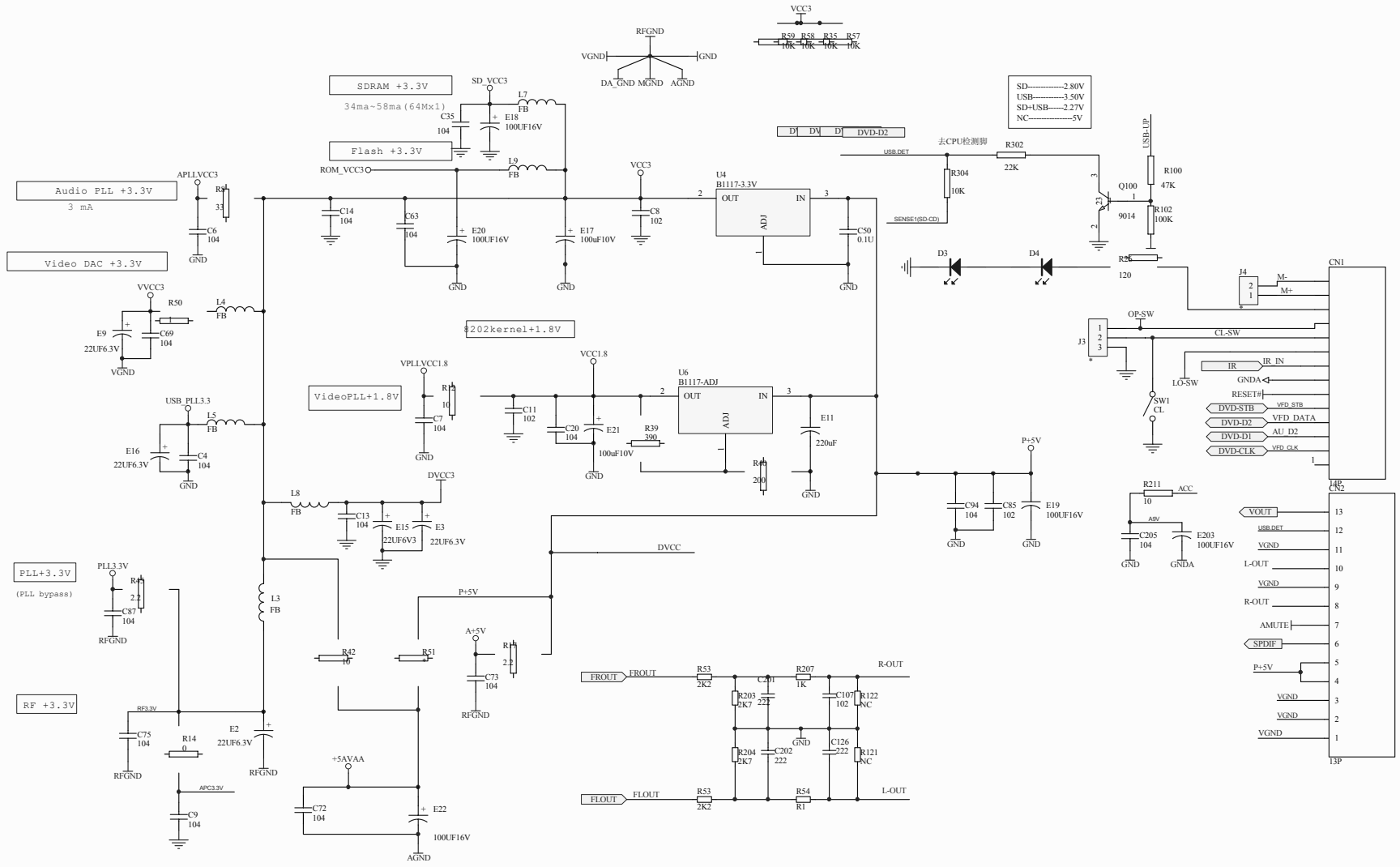

HOP1200W-SUNPLUS-8202D